Models: PFSWCPC75201451F10, PFSWCPC75201452F10

Features:

Submersible sewage pump designed for typical raw sewage and typical septic tank/effluent applications.

- **DISCHARGE:** 2" NPT Male, Vertical
- **LIQUID TEMPERATURE:** 32°-131°F
- **MOTOR HOUSING:** Cast Iron
- **IMPELLER:** Corrosion-resistant, reinforced Thermoplastic
- **PUMP BASE:** Cast Iron
- **SHAFT:** Stainless Steel
- **HARDWARE:** Stainless steel
- **GASKET:** Rubber
- **SEAL:** Single mechanical, Carbon/Ceramic/Stainless Steel
- **UPPER BEARING:** Single row, ball, oil lubricated
- **LOWER BEARING:** Single row, ball, oil lubricated
- **POWER CORD: 115V -** SJTW, 16AWG/3C Cord with plug, **230V** - SJTW 18AWG/3C Cord with plug
- **MOTOR:** Energy efficient Permanent Split Capacitor (PSC), Oil filled, Class B insulation, Continuous duty (water depth must be at least 6" to prevent motor from overheating), Auto reset thermal overload protector, Circuit requirments; 115V - 20 AMPS, 230V - 10 AMPS
- **LEVEL CONTROL:** Vertical, Mechatronic, Normally Open (N/O), Reinforced thermoplastic, **115V**- SJTW 16AWG/3C, **230V** - SJTW 18AWG/3C, 10 Ft. cord with, Piggy-back plug, On-Off points are adjusteable, Attaches to discharge piping
- **WARRANTY:** 3 year

Submersible Sewage Pump
3/4 HP, 115 & 230V
2" Discharge,
2" Spherical Solids
Cast Iron
Vertical Float

MODEL	HP	Hz	Volts/Ph	RPM	FL AMPS	Cord Length	Wt.
PFSWCPC75201451F10	3/4	60	115/1	1750	9.5	10 ft	32.3 lbs
PFSWCPC75201452F10	3/4	60	230/1	1750	4.7	10 ft	32.3 lbs

C US
263520

HEAD in Ft	0 Ft	5 Ft	10 Ft	15 Ft	Max Lift	Max Pressure
FLOW Gallon/Minute	145	125	100	65	20 Ft	8.8 psi
FLOW Gallon/Hour	8700	7500	6000	3900		

PF	TYPE U, SP, SW	Motor Housing P, C	Impeller Type P, C	Suction Plate Type P, C	Motor HP 25, 33, 50, 75, 1	30	50	Voltage 1 or 2	Float Switch Type M, F, T	Cord Length 10, 20
Power-Flo	U = Utility SP = Sump Pump SW = Sewage Pump	P = Plastic C = Cast Iron	P = Plastic C = Cast Iron	P = Plastic C = Cast Iron	25 = 1/4 HP 33 = 1/3 HP 50 = 1/2 HP 75 = 3/4 HP 1 = 1 HP	**Shut Off Head (ft)**	**Max Flow (Gal)**	1 = 115 V 2 = 230V	M = Manual F = Fixed Vertical T = Tethered	10 Ft 20 Ft

EXAMPLE: PFSPCPC3330501T10 - Power-Flo Pumps - Sump Pump - Cast Iron Motor Housing - Plastic Impeller - Cast Iron Suction Plate - 1/3HP - 30' Shut Off Head - 50 GPM Max Flow - 115 Volt - Tethered Float - 10' Cord

Model: PFSWCPC75201451F10, PFSWCPC75201452F10

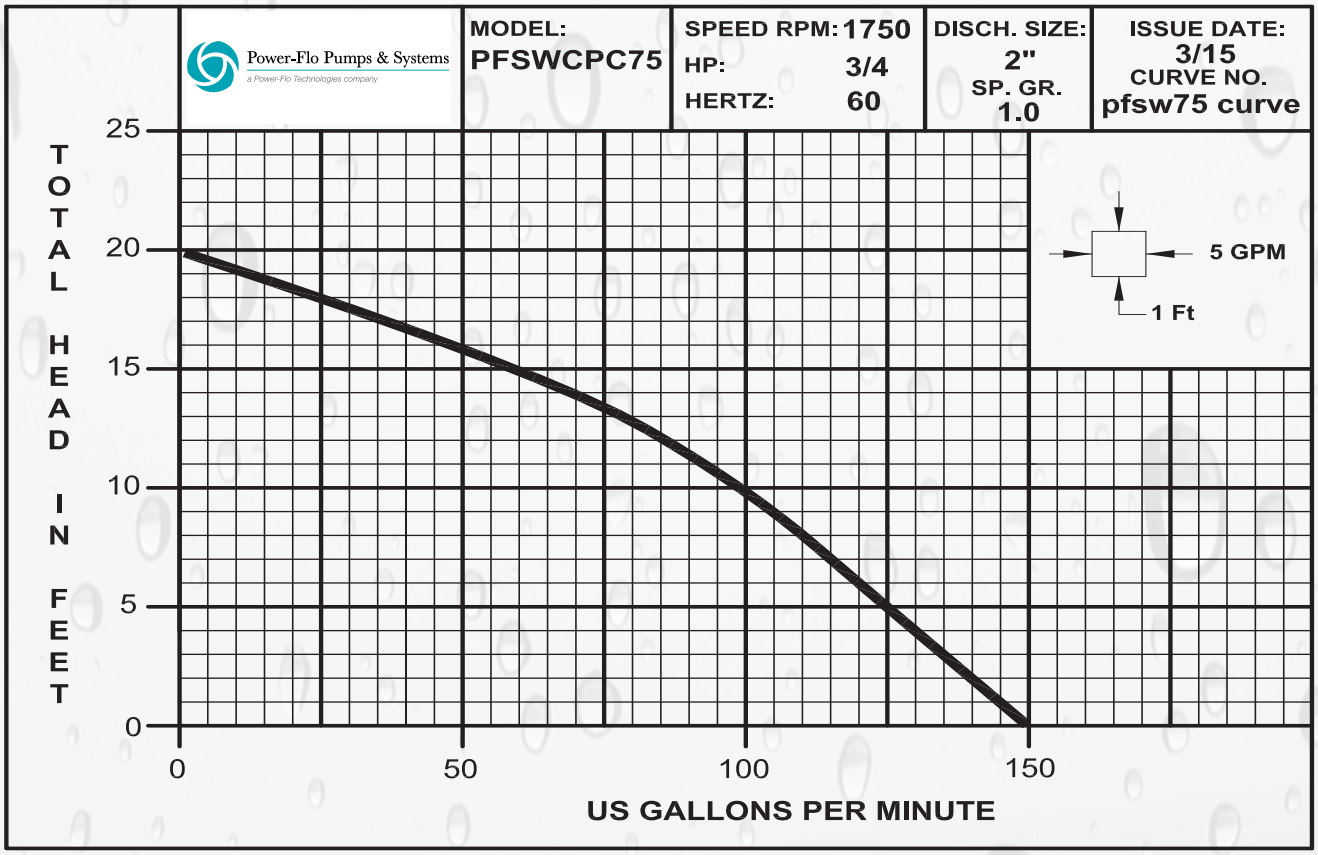

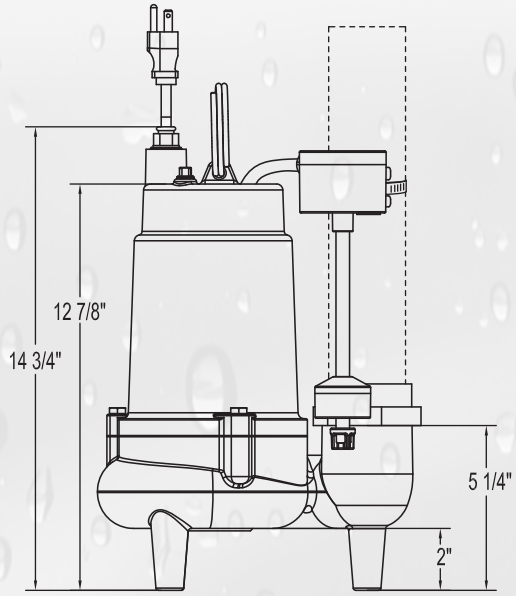

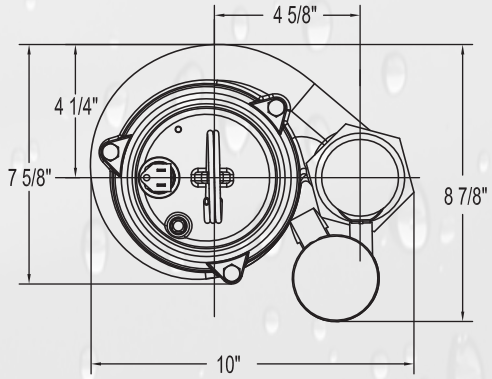

PF	TYPE U, SP, SW	Motor Housing P, C	Impeller Type P, C	Suction Plate Type P, C	Motor HP 25, 33, 50, 75, 1	30	50	Voltage 1 or 2	Float Switch Type M, F, T	Cord Length 10, 20
Power-Flo	U = Utility SP = Sump Pump SW = Sewage Pump	P = Plastic C = Cast Iron	P = Plastic C = Cast Iron	P = Plastic C = Cast Iron	25 = 1/4 HP 33 = 1/3 HP 50 = 1/2 HP 75 = 3/4 HP 1 = 1 HP	**Shut Off Head (ft)**	**Max Flow (Gal)**	1 = 115 V 2 = 230V	M = Manual F = Fixed Vertical T = Tethered	10 Ft 20 Ft

EXAMPLE: PFSPCPC3330501T10 - Power-Flo Pumps - Sump Pump - Cast Iron Motor Housing - Plastic Impeller - Cast Iron Suction Plate - 1/3HP - 30' Shut Off Head - 50 GPM Max Flow - 115 Volt - Tethered Float - 10' Cord